Sentinel Remote Monitoring

4 Channel up to 800 devices per panel

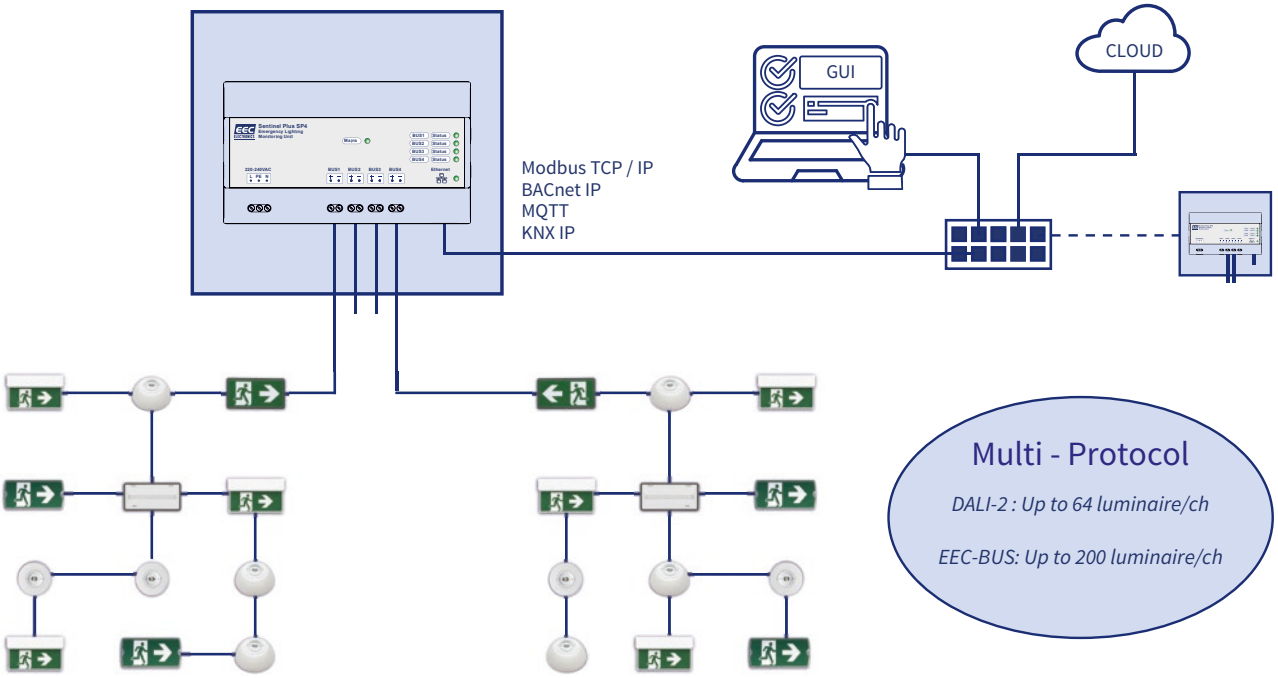

Multi - Protocol

DALI-2 : Up to 64 luminaire/ch

EEC-BUS: Up to 200 luminaire/ch

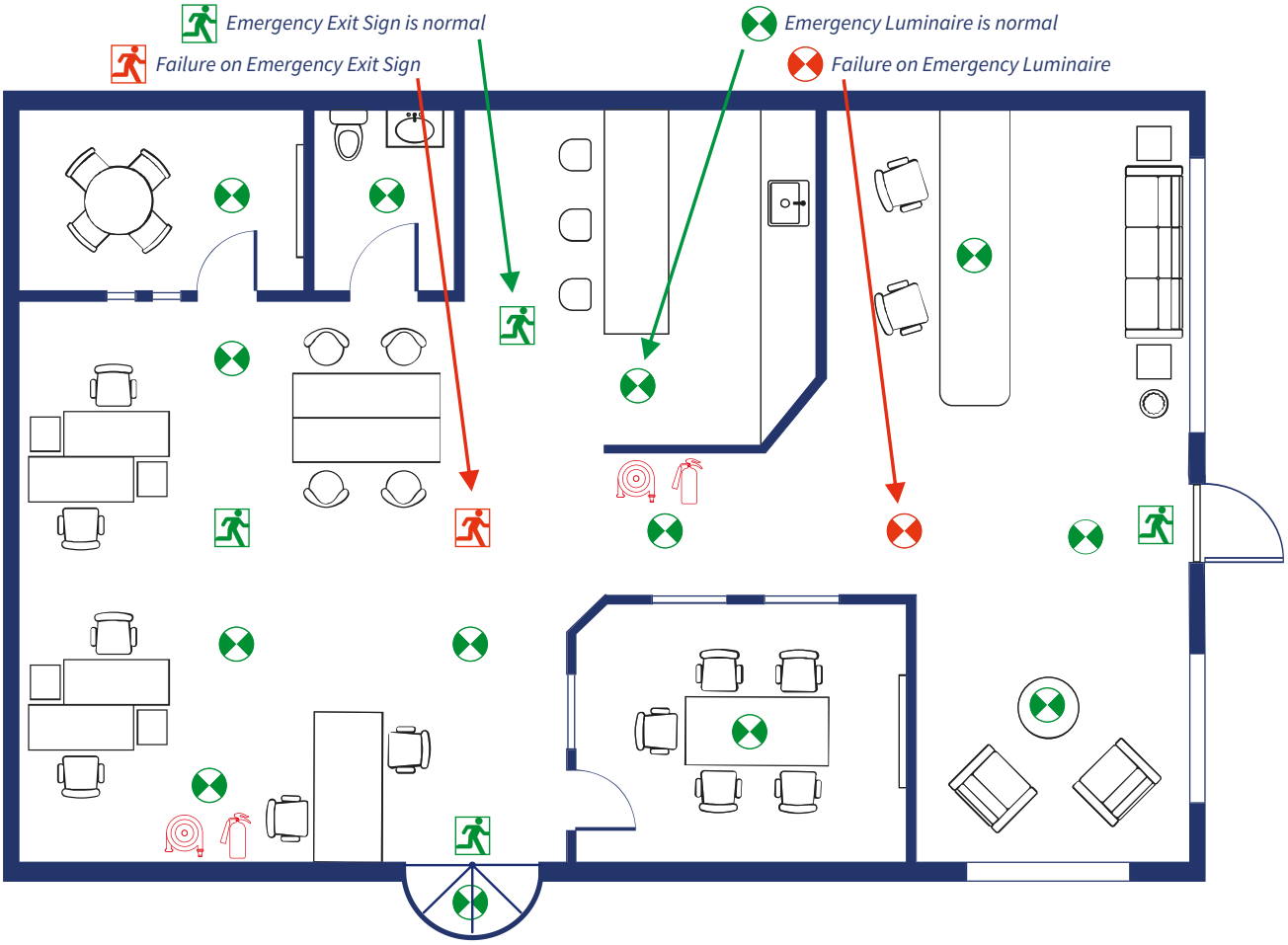

ELEKTRONIK CIHAZLAR SANAYI VE TICARET A.S.
Mahmutbey, Kucuk Halkali Cad 17 Bagcilar 34218 Istanbul, Turkiye
Tel : +90 212 210 2123 **Fax** : +90 212 222 8180
Web : www.eecelectronics.com.tr **E-mail :** sales@eecelectronics.com.tr

Our policy is one of continued development and improvement, we reserve the right to alter design and specifications or delete products without prior notice.

EEC ELECTRONICS